DDR3 Advantages

©2009 Micron Technology, Inc. All rights reserved. Products are warranted only to meet Micron's production data sheet specifications. Information, products and/or specifications are subject to change without notice. All information is provided on an "AS IS" basis without warranties of any kind. Dates are estimates only. Drawings not to scale. Micron and the Micron logo are trademarks of Micron Technology, Inc. All other trademarks are the property of their respective owners.

DDR3 Advantages

- Lower power
- Higher speed
- Master reset
- More performance
- Larger densities
- Modules for all applications

©2009 Micron Technology, Inc. All rights reserved.

Lower Power

- Supply voltage reduced from 1.8V to1.5V
  - ~30% reduction in power due to supply voltage alone
- Lower I/O buffer power
  - 34 ohm driver vs. 18 ohm driver

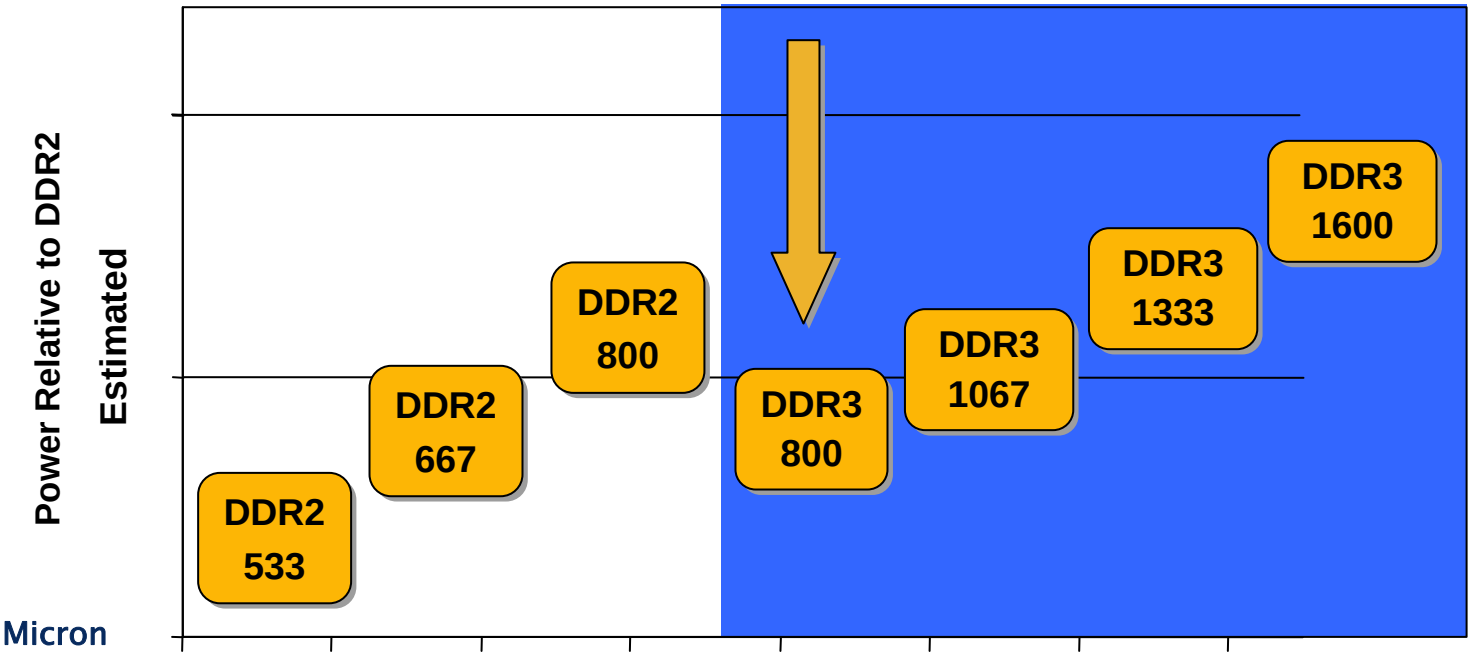

Source: Micron

©2009 Micron Technology, Inc. All rights reserved.

Designed for High-Speed Signaling

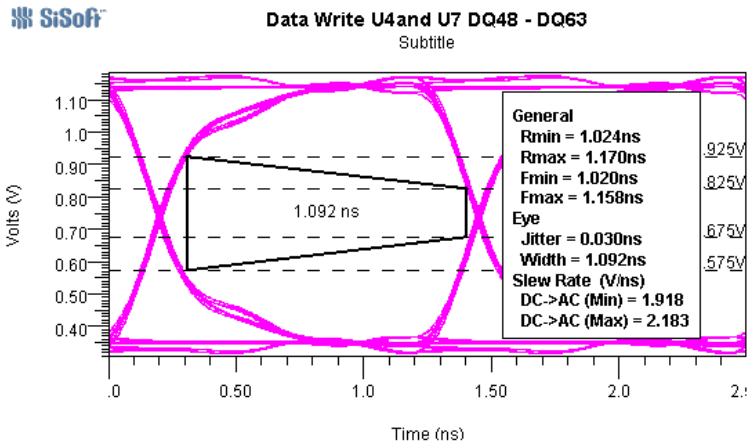

- Improved pinout
- Fly-by architecture
- READ and WRITE leveling
- Data calibration through ZQ resistor
- Dynamic ODT for improved WRITE signaling
- 2 DIMMs/channel at DDR3 frequencies

©2009 Micron Technology, Inc. All rights reserved.

Improved Pinout

- Improved power delivery
  - More power and ground balls
- Improved signal quality
  - Improved signal integrity
  - Improved power and ground distribution
  - Improved signal referencing
- Fully populated ball grid
  - Improved mechanical reliability
- Improved D/Q array
  - Less D/Q skew
  - Tighter D/Q timing

DDR3

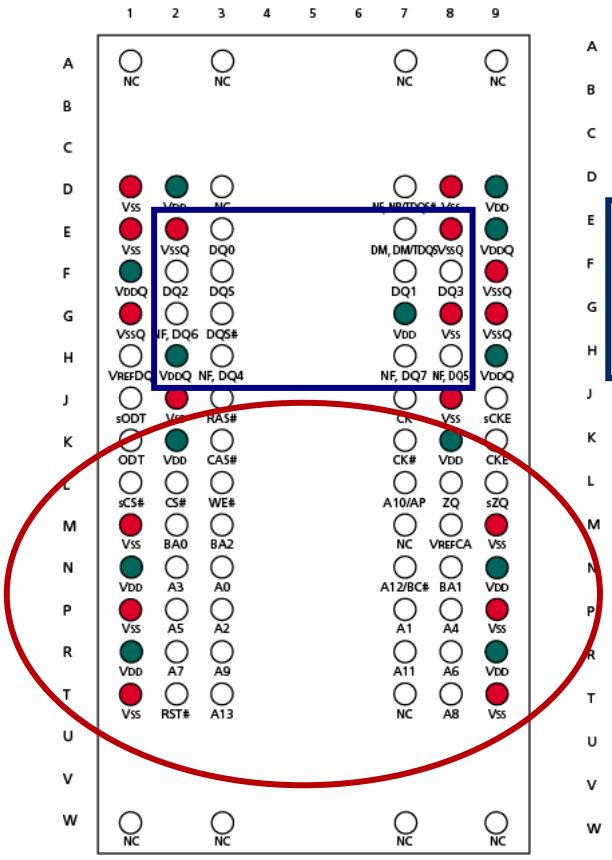

DDR2

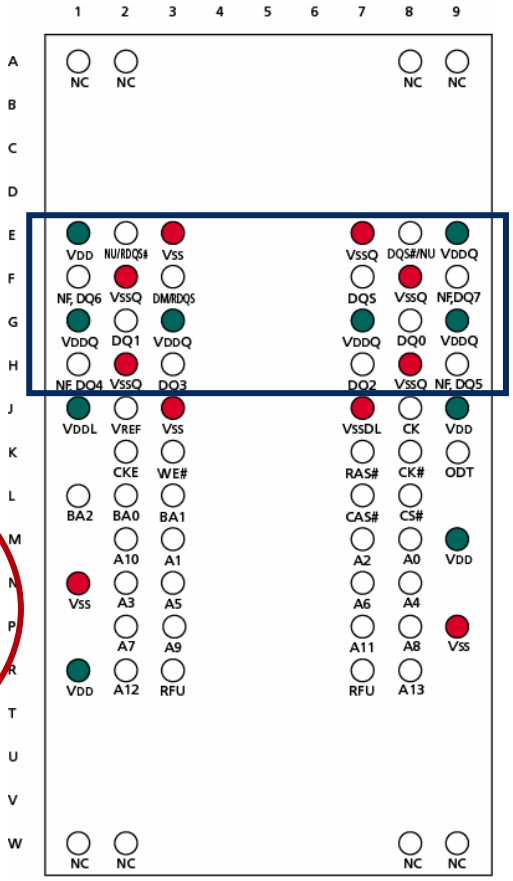

©2009 Micron Technology, Inc. All rights reserved.

Improved Module Layout

- Fly-by architecture for C/A, control, clocks
  - Improved signal integrity for high speeds
  - On-module termination
  - Used on UDIMM, SODIMM, RDIMM
- Not used on DDR2 – not needed at lower frequencies

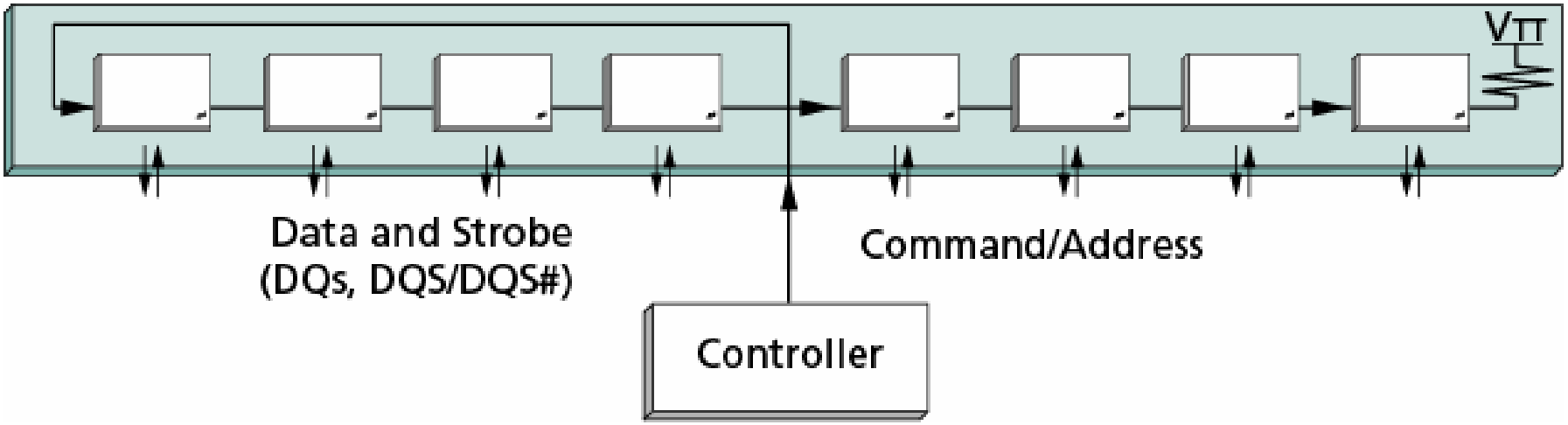

©2009 Micron Technology, Inc. All rights reserved.

READ/WRITE Leveling

- Allows for controller to determine the time delta for data command to data output of each DRAM (byte lane)
  - Enables controller to capture data for each byte lane
  - Enables controller to adjust receiver timing per byte lane

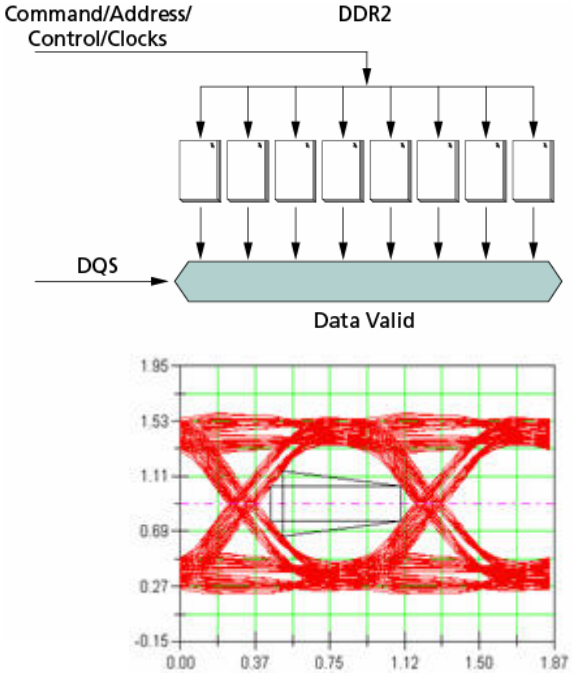

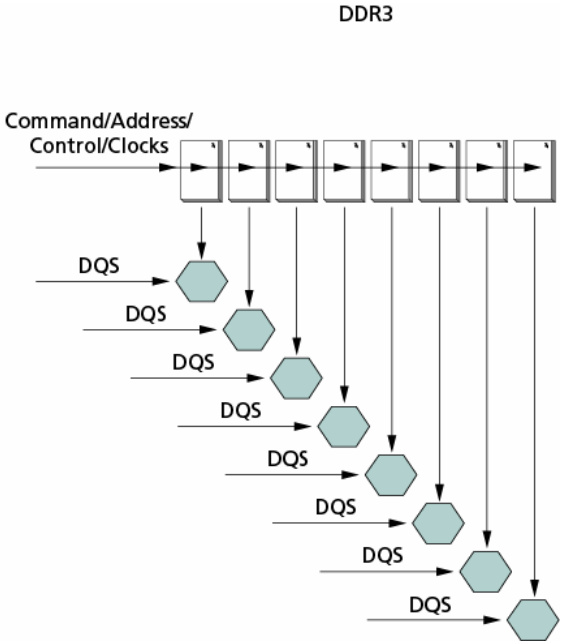

©2009 Micron Technology, Inc. All rights reserved.

Master Reset

- Improved system stability
  - Eliminates unknown start-up states
  - Known initialization and recovery state
    - Cold boot reset
    - Warm boot reset
    - Removes controller burden to ensure no illegal commands

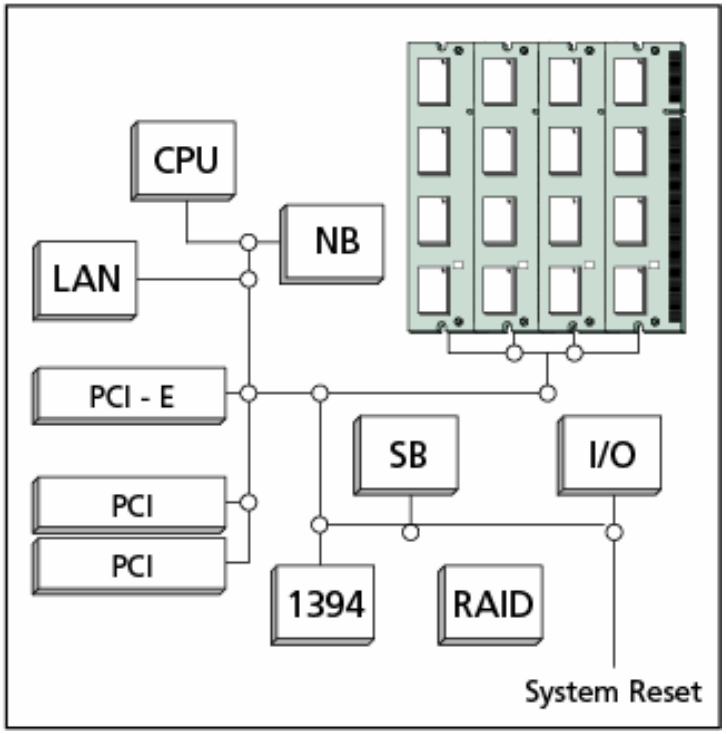

©2009 Micron Technology, Inc. All rights reserved.

Increased Peak Performance

- 2X the bandwidth of DDR2
  - Component per pin
    - 800 MT/s to 1600 MT/s
  - Bus bandwidth
    - 6400 MT/s to 12,800 MT/s
- 8 banks vs. 4 banks
  - More open banks for back-to-back access
  - Hide turnaround time
  - Hide ^{t}RP

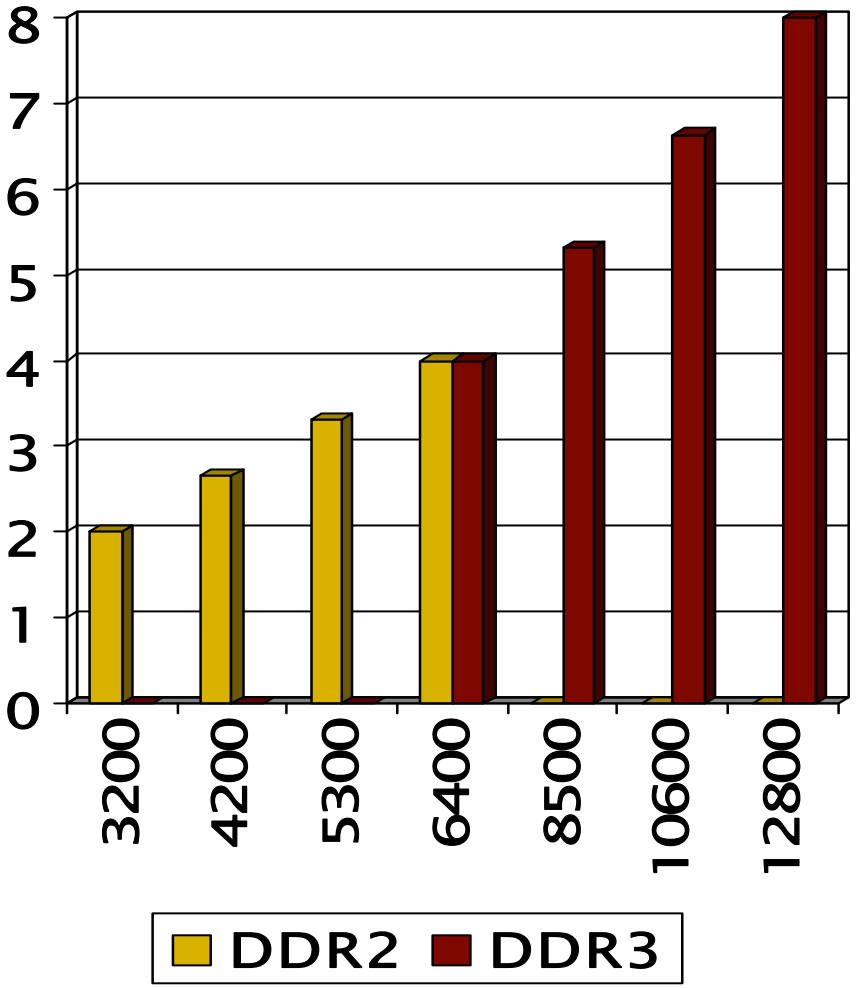

©2009 Micron Technology, Inc. All rights reserved.

DDR3 Market

- DDR3 market dynamics
  - 512Mb/1Gb crossover
  - 1Gb/2Gb crossover
  - DDR3 life from 2007 through 2014

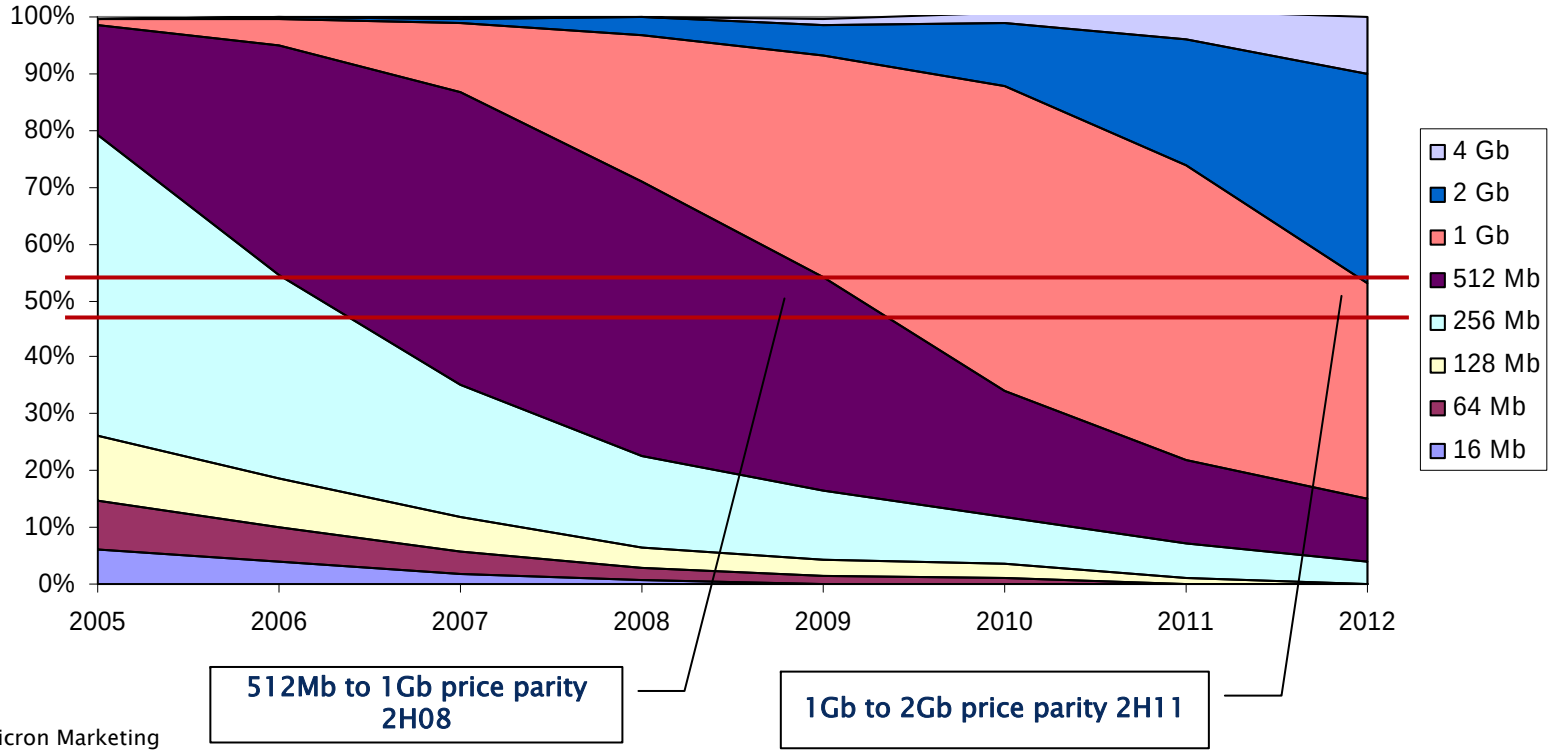

Source: Micron Marketing

©2009 Micron Technology, Inc. All rights reserved.

DDR3 Ramp

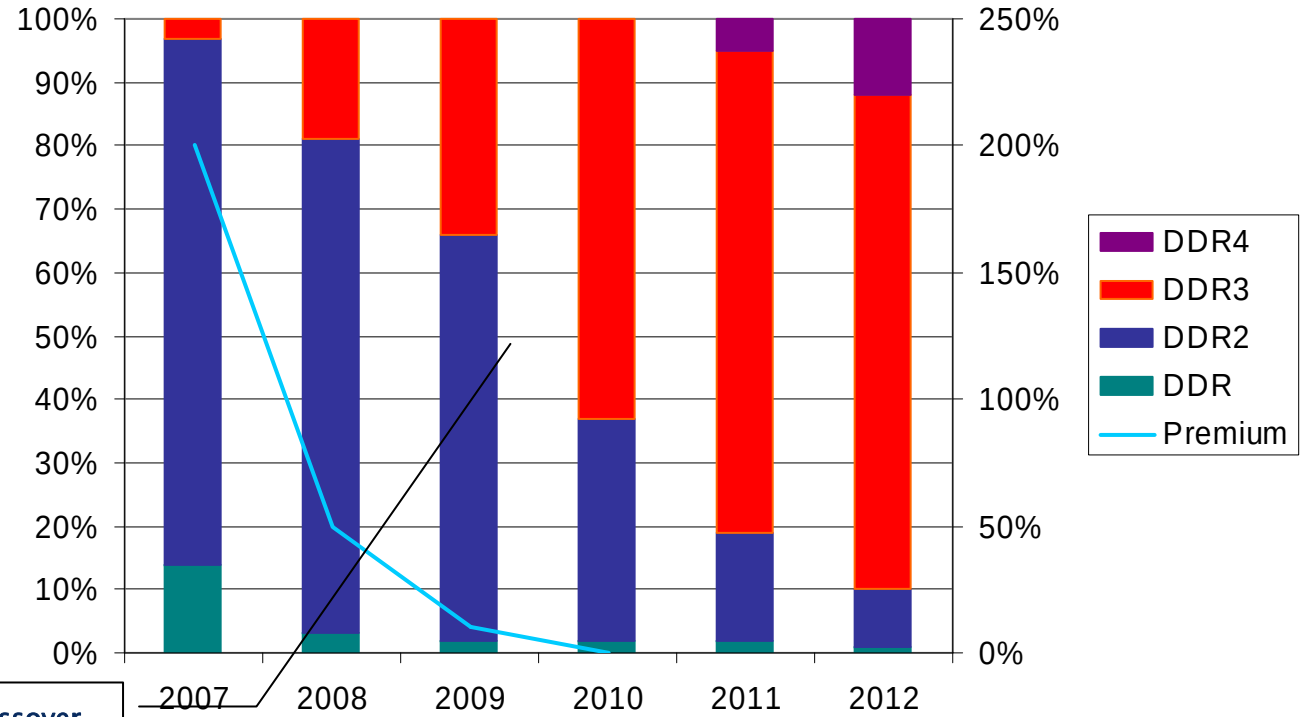

DDR2 to DDR3 Crossover

Source: Micron Marketing

	2007	2008	2009	2010
DDR	14%	3%	2%	1%
DDR2	83%	78%	64%	33%
DDR3	3%	19%	34%	60%

©2009 Micron Technology, Inc. All rights reserved.

Maximum* Module Density

Component Density / Module Density		256Mb	512Mb	1Gb	2Gb	4Gb	8Gb
DDR2	UDIMM (18)	512MB	1GB	2 GB	4 GB	n/a**	n/a
	SODIMM(16)	512MB	1GB	2 GB	4 GB		
	RDIMM(36)	1GB	2 GB	4GB	8 GB		
	FBDIMM(36)	1 GB	2GB	4 GB	8GB		
DDR3	UDIMM (18)	n/a	1GB	2 GB	4 GB	8 GB	16 GB
	SODIMM(16)		1GB	2 GB	4 GB	8 GB	16 GB
	RDIMM(36)		2 GB	4 GB	8 GB	16GB	32GB
	FBDIMM(36)		2 GB	4 GB	8GB	16GB	32GB

*Maximum density requires stacked and/or high component count planar versions of modules

** 4Gb is a JEDEC standard; Micron has no plans to support it

©2009 Micron Technology, Inc. All rights reserved.

DDR3 Modules for All Applications

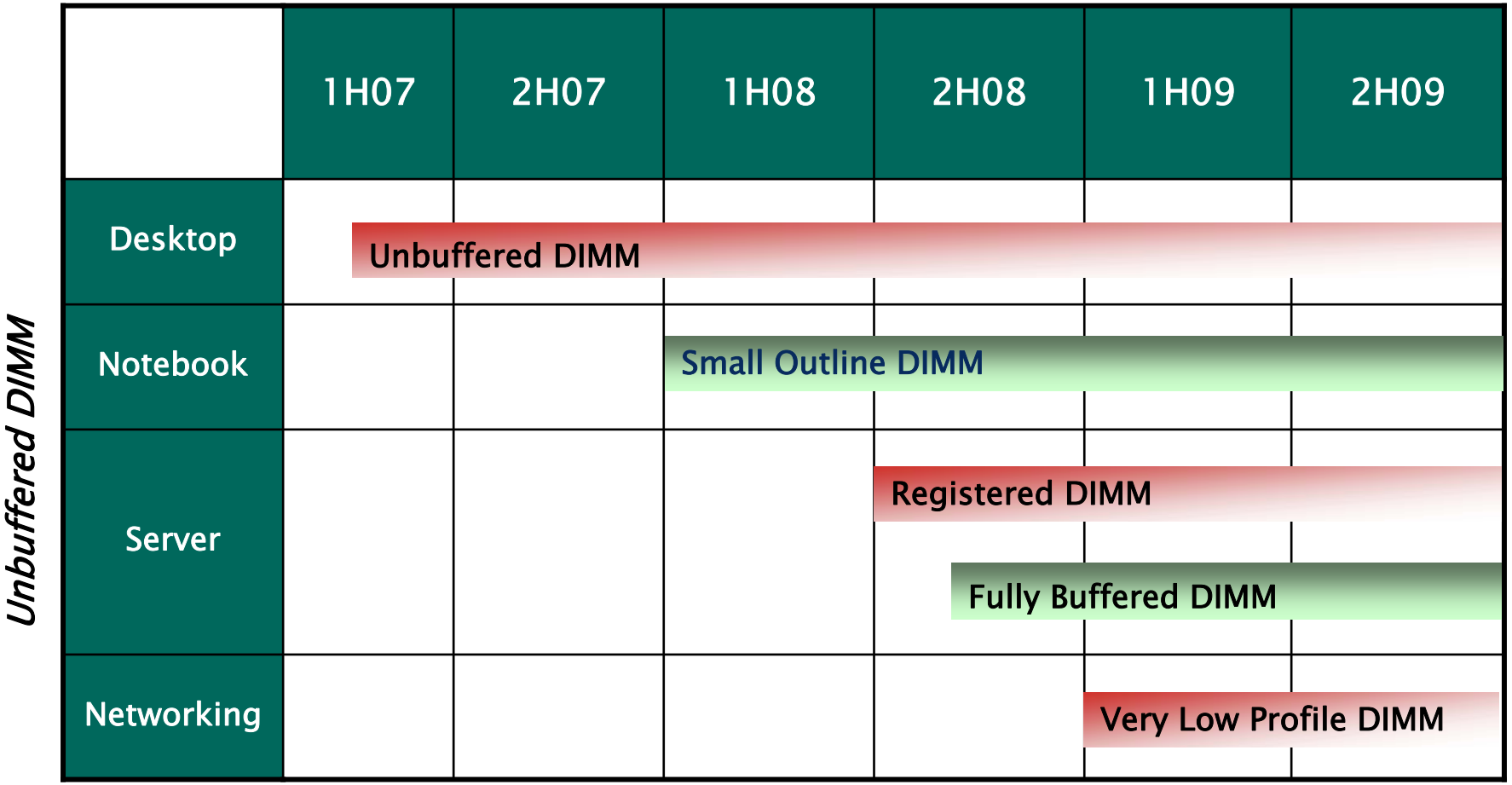

©2009 Micron Technology, Inc. All rights reserved.

Summary

- DDR3 provides more bandwidth at lower power
- Package, pinout, and signaling improvements for higher-speed operation
- Master reset for improved system stability
- Larger densities
- Modules for all applications

©2009 Micron Technology, Inc. All rights reserved.

Micron®